20117 Remote Reservoir Power Steering Bracket

Revised 7-1-06

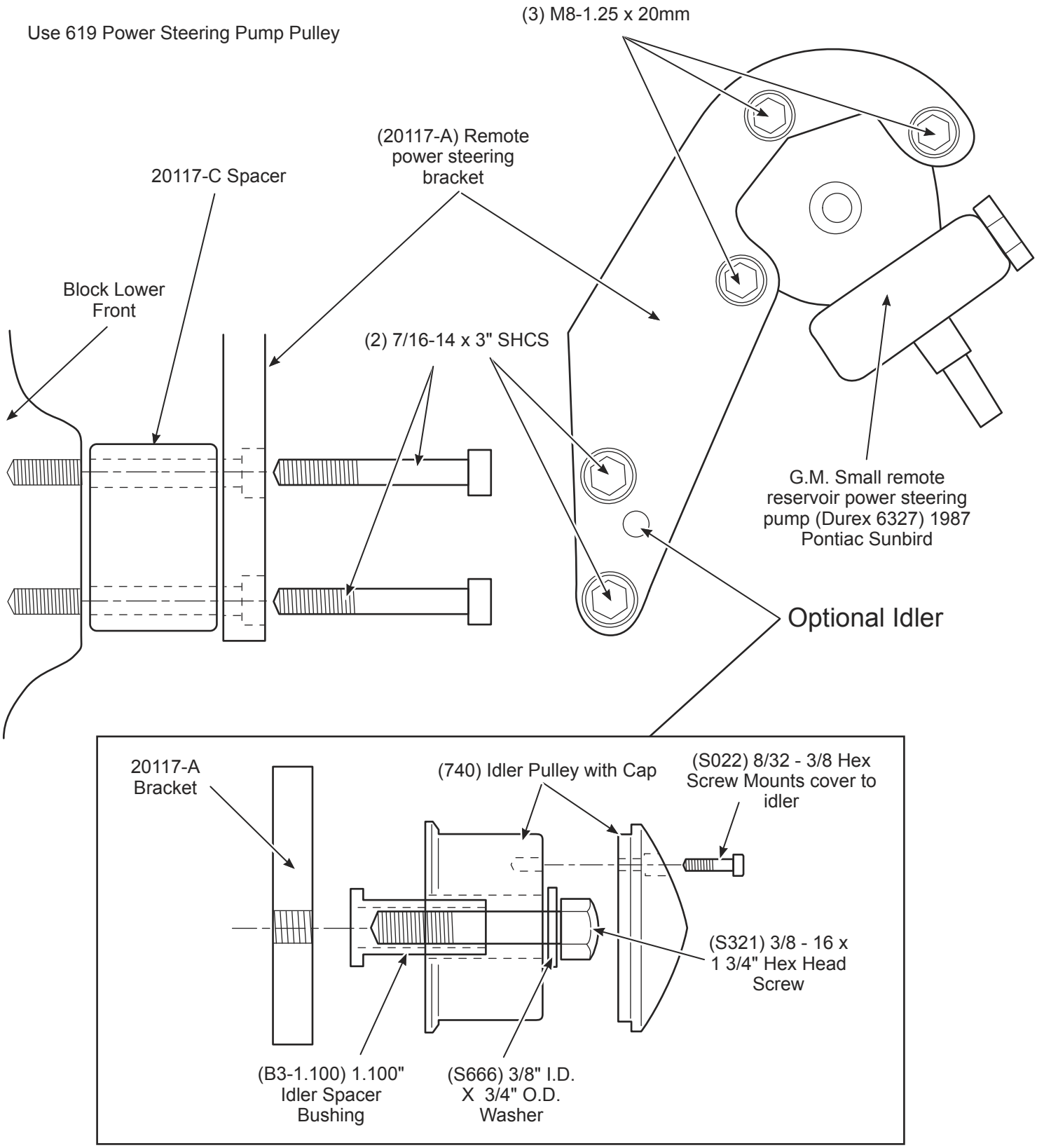

MARCH PERFORMANCE, INC. • 16160 PERFORMANCE WAY • NAPLES, FLORIDA 34110

Technical Support 888-729-9070